In 1853 the young N.A Christensen left his job as an accountant to start an adventure involving an iron foundry. An adventure which started in a factory building in Nykøbing Mors. Despite tough competition from the foundries in the larger cities, it would turn out that a small collection of smiths, lathe and wood workers, created an icon which managed to reach far beyond the city it was created in. An icon created through innovation, built on design, quality and of great craftsmanship, and which therefore always stand comfortably in any home whether in Denmark or abroad. An icon we all know as Morsø.

By appointment to The Royal Danish Court

morsø

since 1853

morsoe.com · #morsomoments

Printed in Denmark. Morsø reserves the right to change specification without prior notice. RoEU 2018.

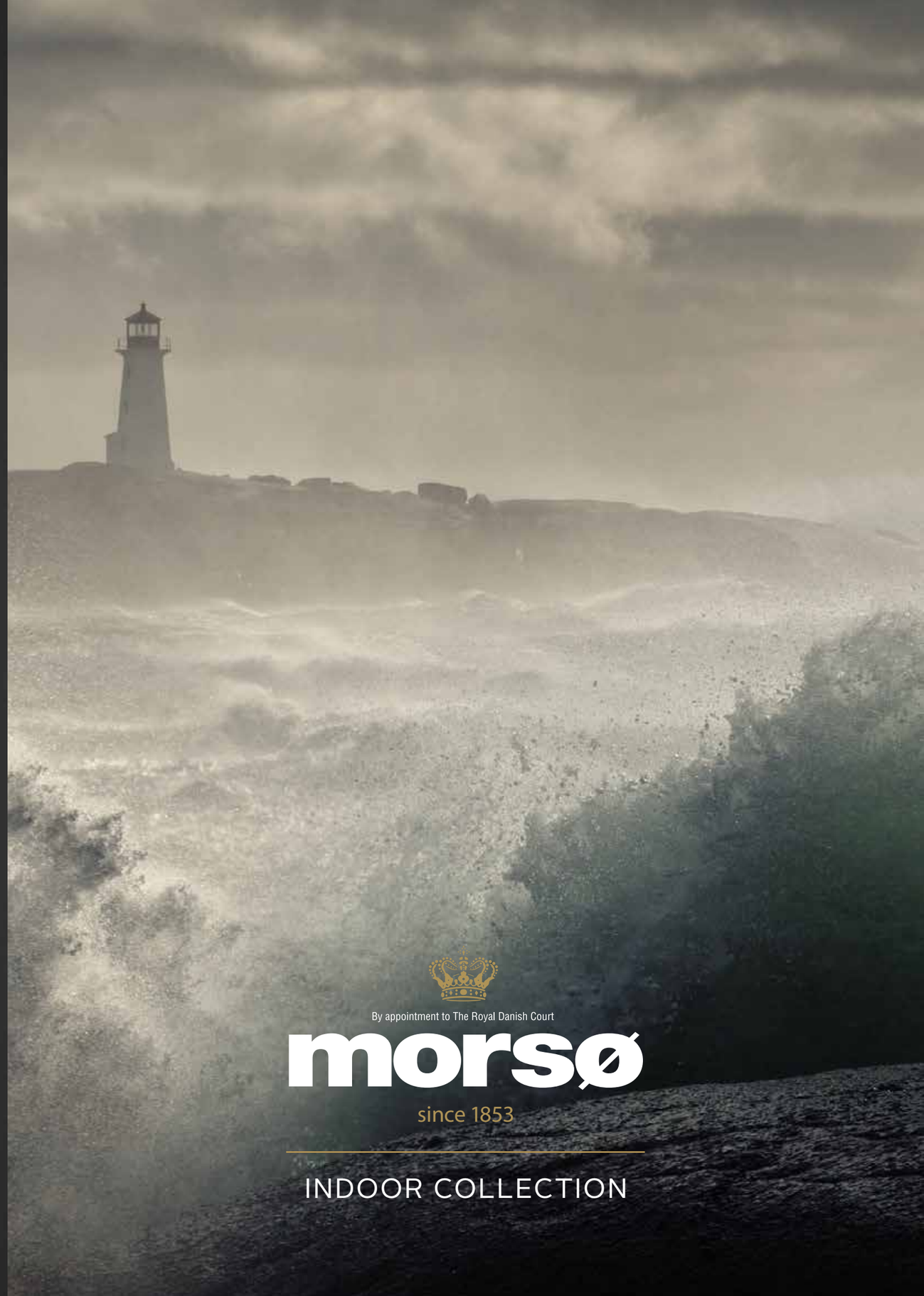

By appointment to The Royal Danish Court

morsø

since 1853

INDOOR COLLECTION

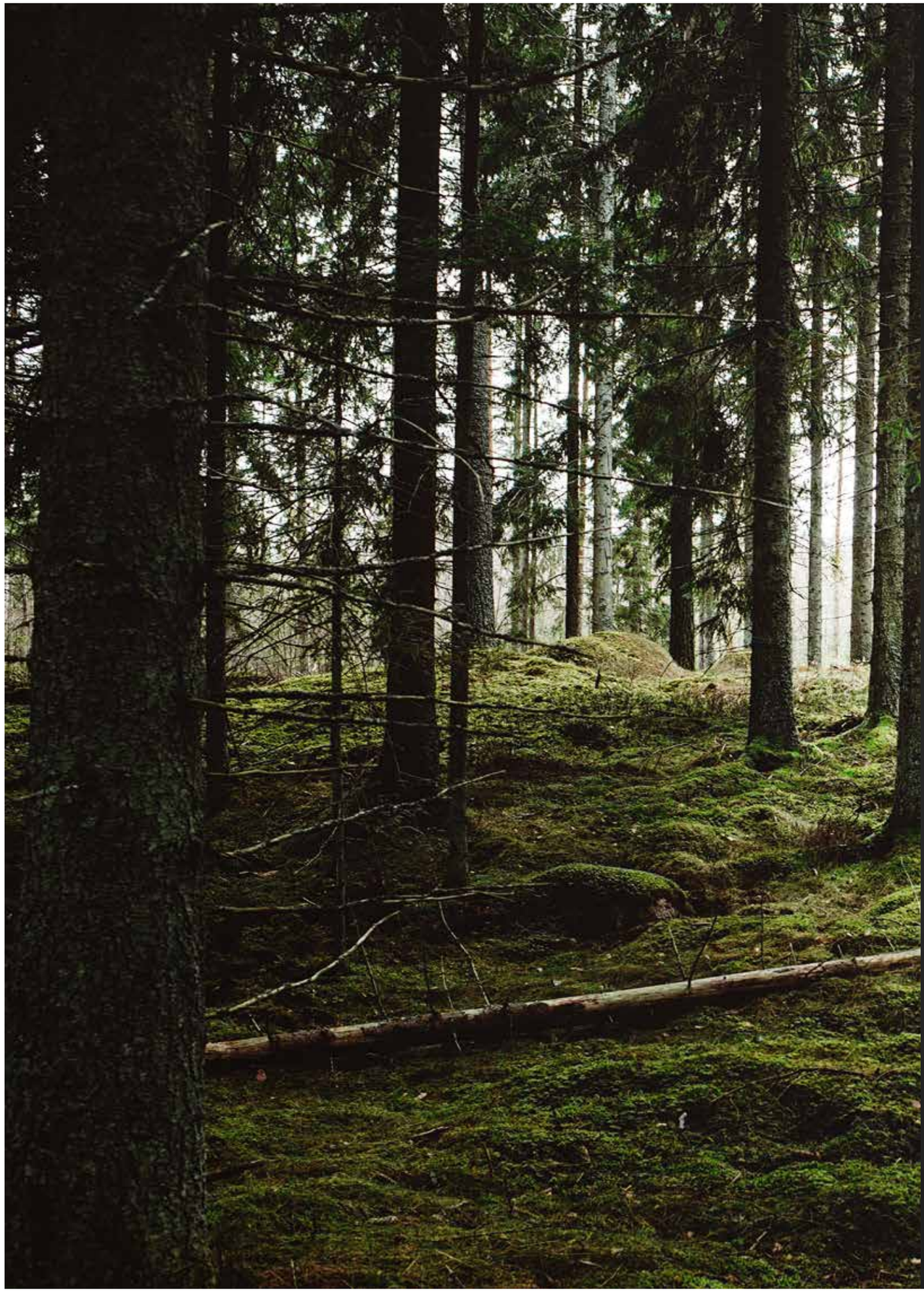

CONTENTS

THE TRUTH ABOUT FIRE AND FLAMES . . . 5
THE WARM FEELING OF HOME . . . 7
2B . . . 8
1126 . . . 10
1400 SERIES . . . 12
2100 SERIES . . . 14
2840 . . . 16
3100 SERIES . . . 18
3440 . . . 20
3640 . . . 22
4043 . . . 24
4100 SERIES . . . 26
6100 SERIES . . . 28
6600 SERIES . . . 30
6800 SERIES . . . 32
7110 . . . 34
7300 SERIES . . . 36
7400 SERIES . . . 38
7648 . . . 40
7800 SERIES . . . 42
7900 SERIES . . . 44
8100 SERIES . . . 46
8259 . . . 48
8710 . . . 50
8800 SERIES . . . 52
5660 . . . 54
S80-90 . . . 55
ACCESSORIES . . . 56
ENVIRONMENTALLY FRIENDLY COMBUSTION . . . 62

THE TRUTH ABOUT FIRE AND FLAMES

Most of us will agree that there's no smoke without fire. However, isn't there a difference between crying 'Fire!' and the sound of a softly crackling wood stove? In the daily environmental debate, we tend to react strongly to even the most logical statements. For instance, what pollutes most: heating a summer cottage with a wood-burning stove, frying bacon or lighting two candles on a cosy evening?

Most people would probably guess the stove, logically enough, since we can both see and smell the smoke.
Even if science tells us that a wood-burning stove filled with dry, certified wood only accounts for a few percent of particulate emissions in a home, and that all the rest comes from clothes, cooking, candles and various other ordinary things, it's easy to assume that a cosy stove or candles are luxuries that environmentally responsible people should avoid.

When it comes to the environment and health, the truth is often more nuanced than a Facebook post by a politician or an article by an interest group, and the only certainty is that the amount of particulates in an average home is made up of such a complex combination of things that in reality it's up to you what you choose to believe.*
At the same time, the number of products we use and consume every day, and the importance we attach to them, varies from person to person. This is why we as a society need the guidelines that have been developed to identify the benefits and harmful effects of various kinds of products. One such measure is EcoDesign 2022 which is a European standard that will ensure all stoves installed after 1st January 2022 will meet a minimum efficiency and maximum permitted carbon emissions. In relation to this, the UK Stove Industry Alliance has backed this Standard with the introduction of the SIA EcoDesign Ready label. This voluntary scheme aims to promote modern stoves that already meet the stringent requirements of EcoDesign 2022. Morsø currently have over 50 SIA EcoDesign Ready models, and while we don't deny there's no smoke without fire, we'd still claim that the smoke from a home with a Morsø stove is cleaner than much of the air that fans the flames of the environmental debate.

In any case we can assure you, or any other responsible and environmentally conscious person, that with both the EcoDesign 2022 and the SIA EcoReady labels in hand, you are free to browse this catalogue and pick out any one of the 50 SIA EcoReady labelled stoves from Morsø with a clean conscience.

Enjoy!

* In their fine print, companies often say that they cannot be held responsible in certain cases where one of their claims does not apply. In this case, it is here to assure you that we mean exactly what we write. In Denmark, 80% of all unhealthy particulates in the open air come from abroad. The remaining 20% are thought to be a mixture of exhaust emissions from diesel cars and smoke from wood-burning stoves. However, one might wonder whether, for example, industry (and much else besides) doesn't also play a small role in producing the last 20% (?!). Humidity, wind and weather play a role too, and it is worth mentioning that firewood is considered carbon neutral, because wood binds carbon dioxide when it grows and releases the same amount again both when it burns and when it rots. Indoors, the story is just as complex, and the only thing everyone can completely agree on is that all the particulates from clothes, cooking, candles and stoves are academic if you smoke tobacco at home. Thankfully, that's up to the individual. Just as it is up to you to decide whether the heat from an eco-labelled wood-burning stove with clean wood is a plus or a minus in the overall environmental accounts.

Morsø 6843

THE WARM FEELING OF HOME

In northern Europe, a relaxed and happy home is one of the most important things in life. Well entrenched in our comfortable homes we focus around the unique Danish term, hygge, a term which so many have tried to translate, hoping to recreate it somewhere else in the world. It has never really succeeded which is due in reality to one very simple reason. The term hygge cannot be defined because it is a sense of wellbeing. Hygge is the name of a feeling and an atmosphere which is found in the very essence of our surroundings. It can be a smell, a warmth, a light in the dark or even the calmness in a crackling fire. Even the weather which so often returns us to the shelter of our homes, is a part of the thing we call Hygge. Hygge is a name. A cosy, inviting and safe name. Hygge is your home.

2B

Morsø 2B Classic
Item-no.: 64209421

Morsø 2B Standard
Item-no.: 64209821

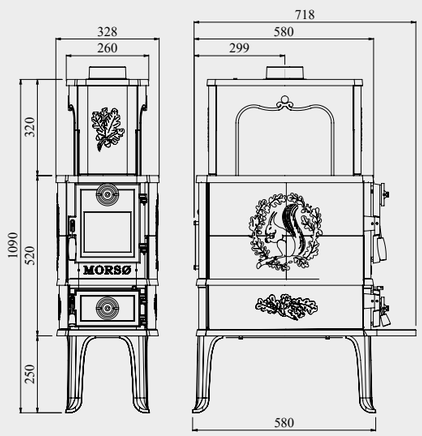

Tested after EN 13240 — A+

Rated output	8 kW
Draft	12 Pa
Operating output	6-10 kW
Heats up	90-150 m²
Flue exit top/rear fits	Ø 120 mm
Weight	106/63 kg
Chamber width	50 cm
Efficiency	83%
Dust	27 mg/m³
CO	0,13%

Clearance to Combustibles

Rear	400 mm
Sides	850 mm

Drawings with measurements on the other models in this series, you will find on www.morsoe.com

No past – no future. At the beginning of the 1930s, the sculptor, Constantin Sørensen, created this impressive radiant stove, featuring Morsø's well-known decoration of squirrel and oak leaves. Then, as today, the **Morsø 2B Classic** is in great demand, and with its almost stately appearance, the stove is perfect for patrician and farm style homes.

We have completely updated the combustion technology in the Morsø 2B Classic, so that it now meets today's stringent environmental requirements. There's almost no better way to have a fire than with the Morsø 2B Classic.

Morsø 2B Classic
Item-no.: 64209421

1126

Morsø 1126
Item-no.: 64260621

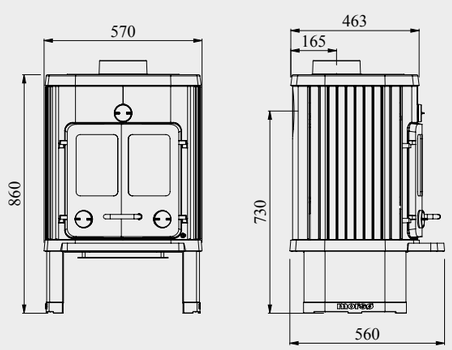

Tested after EN 13240 — A+

Rated output	7,8 kW
Draft	12 Pa
Operating output	5-10 kW
Heats up	75-150 m²
Flue exit top/rear fits	Ø 150 mm
Weight	133 kg
Chamber width.	39 cm
Efficiency	80,7%
Dust	35 mg/m³
CO	0,08%

Clearance to Combustibles

Rear	300 mm
Sides	400 mm

Morsø 1126 – one of Morsø's most popular woodburning stoves – is a further development of the Morsø 1124. Even now, a quarter of a century after it was launched, Morsø 1126 still remains a highly attractive stove. This is particularly due to its unique design and considerable performance capability. The stove is a large and efficient convection stove that, without problems, can heat up an area of 150 m2.

Morsø 1126
Item-no.: 64260721

1400 SERIES

Morsø 1412
Item-no.: 64141921

Morsø 1442
Item-no.: 64145421

1412

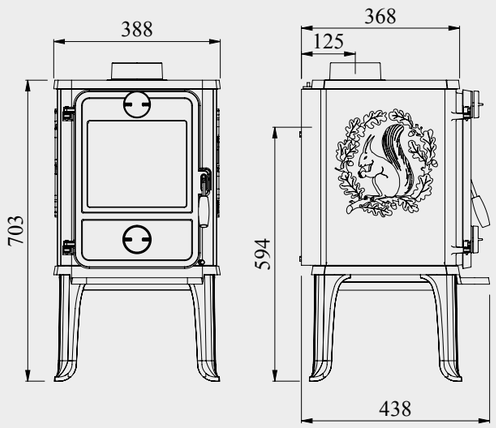

Tested after EN 13240

Rated output	5 kW
Draft	12 Pa
Operating output	3-5 kW
Heats up	45 - 75 m²
Flue exit top/rear fits	Ø 120 mm
Weight	74/95 kg
Chamber width	31 cm
Efficiency	83%
Dust	17 mg/m³
CO	0,07%

Clearance to Combustibles

Rear	200 mm
Sides	300 mm

Drawings with measurements on the other models in this series, you will find on www.morsoe.com

A steady beating heart. The **Morsø 1400** is the quintessence of a charming stove. It represents what was the heart of many a home, what we know and remember from our childhood. The combustion technology of these classic stoves have since then been further developed and improved so that harmful particles and surplus gases are burnt off. That's why, today, the stoves fulfil the strictest environmental requirements and also bear the Nordic Swan Eco-label. Despite all improvements in technology there are some details which remain timeless and a sign of quality, so Morsø's caracteristic squirrel can still be found on the sides. It also available with contemporary ribbed sides.

Morsø 1442
Item-no.: 64145421

2100 SERIES

Morsø 2110
Item-no.: 64180921

Morsø 2140
Item-no.: 64214221

2140

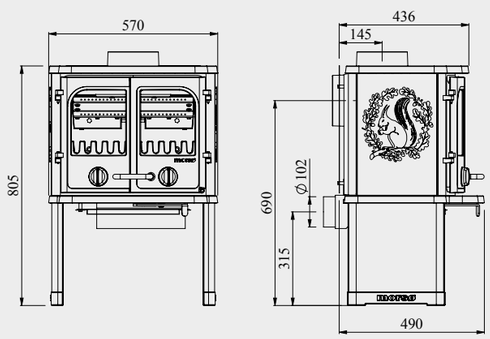

Tested after EN 13240 — A

Rated output	5,5 kW
Draft	12 Pa
Operating output	4-8 kW
Heats up	60-120 m²
Flue exit top/rear fits	Ø 150 mm
Weight	119 kg
Chamber width	42 cm
Efficiency	78,3%
Dust	32 mg/m³
CO	0,09%

Clearance to Combustibles

Rear	200 mm
Sides	400 mm

The 2100 series is prepared for external air from the rear.
Outside air kit available.
Drawings with measurements on the other models in this series, you will find on www.morsoe.com

Nostalgic look, glowing with English charm. The cast-iron stove, which is very spacious and effective, was the creation of the English designers, Queensbury Hunt. Together with the English designers, we have created a powerful stove, which is a true representative of the proud Morsø tradition. The Morsø 2100-series has an extra wide combustion chamber, allowing the use of large-sized fuel. At the same time, the width of the doors facilitate large glass windows, allowing you to gaze at the slow crackling fire.

Morsø 2140
Item-no.: 64214221

2840

NEW

Morsø 2840
Item-no.: 64284021

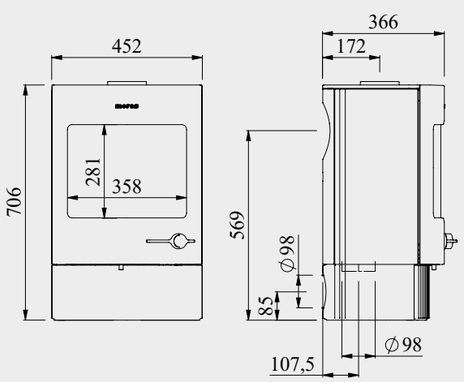

Tested after EN 13240 — A+

Rated output	4,5 kW
Draft	12 Pa
Operating output	3-6 kW
Heats up	45-90 m²
Flue exit top/rear fits	Ø 120 mm
Weight	100 kg
Chamber width	30 cm
Efficiency	81%
Dust	18 mg/m³
CO	0,05%

Clearance to Combustibles

Rear	125 mm
Sides	350 mm

Model 2840 is prepared for external air from the rear and bottom.
Outside air kit available.

This small stove is a modern edition of the iconic squirrel stove, that has been redesigned down to the tiniest detail. The triangular shape fits perfectly in the corner of the room and the striped sides bear reference to the old iconic Morsø stoves.
The pleasant and functional handle provides easy access to the firebox.

Morsø 2840
Item No.: 64284021

3100 SERIES

NEW

Morsø 3116
Item-no.: 64312021

Morsø 3142
Item-no.: 64314921

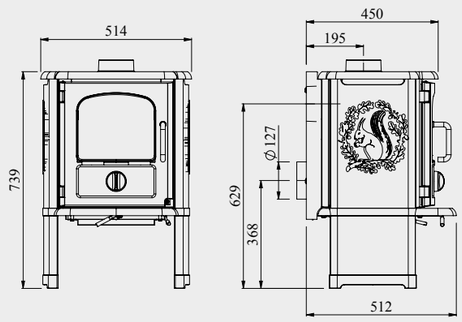

3142

Tested after EN 13240 — A+

Rated output	5,2 kW
Draft	12 Pa
Operating output	3-6 kW
Heats up	45-90 m²
Flue exit top/rear fits	Ø 120 mm
Weight	95/111 kg
Chamber width.	33 cm
Efficiency.	81%
Dust.	33 mg/m³
CO	0,04%

Clearance to Combustibles

Rear	200 mm
Sides	600/400 mm

Model 3116 is prepared for external air from the rear.
Outside air kit available.
Drawings with measurements on the other models in this series, you will find on www.morsoe.com

The Morsø 3100 series incorporates the best from the classic Morsø design, but takes advantage of the latest combustion principles. Efficient and environmentally friendly multi-fuel stoves The 3112 is equipped with riddling grate and ashpan, making it easy to remove ash and clean the stove. It is manufactured using the latest combustion principles with tertiary air supply and meet the most stringent environmental requirements. It can be fired with wood, briquettes or approved smokeless fuel and is suitable for heating areas of up to 75 cubic metres.

Morsø 3142
Item-no.: 64314921

3440

Morsø 3440
Item-no.: 64343521

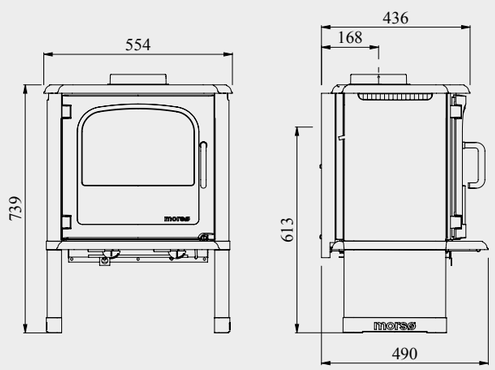

Tested after EN 13240 — A+

Rated output	6,5 kW
Draft	12 Pa
Operating output	4-7 kW
Heats up	60-105 m²
Flue exit top/rear fits	Ø 150 mm
Weight	116 kg
Chamber width	39 cm
Efficiency	80,1%
Dust	30 mg/m³
CO	0,10%

Clearance to Combustibles

Rear	350 mm
Sides	350 mm

Drawings with measurements on the other models in this series, you will find on www.morsoe.com

We designed the **Morsø 3400** stoves together with the well-known, English design company, Queensbury Hunt Levien, retaining the classic Morsø lines and stylish look, while also integrating an advanced combustion system. The wide door with large stove glass provides a wonderful view of the flames, helping create both mood and heat in the home.

Morsø 3440
Item-no.: 64343521

3640

Morsø 3640
Item-no.: 64364021

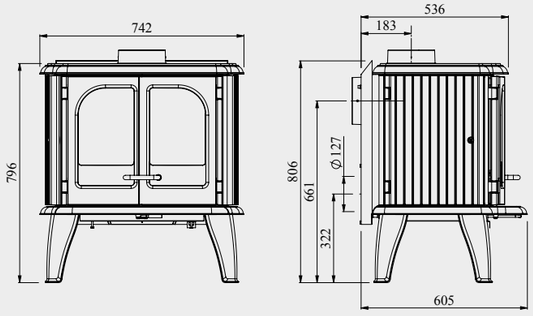

Tested after EN 13240 — A

Rated output	9 kW
Draft	12 Pa
Operating output	6-14 kW
Heats up	100-210 m²
Flue exit top/rear fits	Ø 150 mm
Weight	251 kg
Chamber width	59,5 cm
Efficiency	75,6%
Dust	36 mg/m³
CO	0,07%

Clearance to Combustibles

Rear	200 mm
Sides	400 mm

Drawings with measurements on the other models in this series, you will find on www.morsoe.com

Morsø 3600 radiant stove is a large, well designed heat source perfect when you need to heat a large area. This cast iron stove is designed by the well-known, english design company, Studio Levien. The stove has an additional side door for convenient loading. A classic Morsø design, this cast iron beast will watch over your home like a tame dragon. An optional outside air kit is available for this model.

Morsø 3640
Item-no.: 64364021

4043

Morsø 4043
Item-no.: 65404321

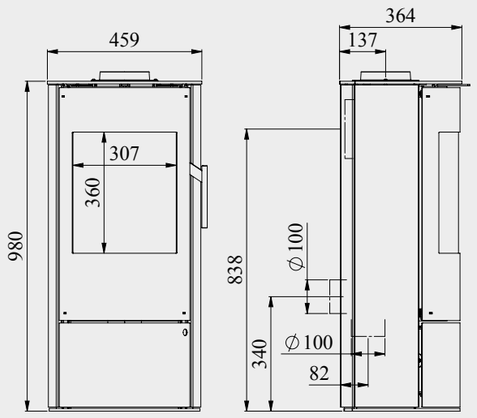

Tested after EN 13240 — A+

Rated output	5,0 kW
Draft	12 Pa
Operating output	3-6 kW
Heats up	45 - 90 m²
Flue exit top/rear fits	Ø 150 mm
Weight	98 kg
Chamber width.	34 cm
Efficiency.	81%
Dust.	39 mg/m³
CO	0,01%

Clearance to Combustibles

Rear	200 mm
Sides	400 mm

Model 4043 is prepared for external air from the rear and bottom.

The **Morsø 4043** is a unique stove that – owing to its unpretentious and functional design – is easily fitted into most homes. The height combined with the unadorned surfaces and the impressive view of the fire are very characteristic elements of this stove. Morsø 4043 has a dependable burning chamber that contributes to the stove's user-friendliness when topping up with additional firewood. This stove not only meets the strictest environmental standards, it is also equipped with a handle that will always remain cold.

Morsø 4043
Item-no.: *65404321*

4100 SERIES

Morsø 4143
Item-no.: 64414321

Morsø 4155 White
Item-no.: 64415545 - matt

Morsø 4155 Black
Item-no.: 64415541 - matt

4155

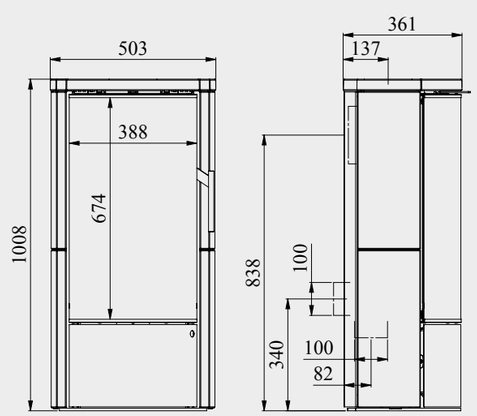

Tested after EN 13240 — A+

Rated output	5,2 kW
Draft	12 Pa
Operating output	3-7 kW
Heats up	45 - 105 m²
Flue exit top/rear fits	Ø 150 mm
Weight	115 kg
Chamber width.	34 cm
Efficiency	81%
Dust	39 mg/m³
CO	0,01%

Clearance to Combustibles

Rear	200 mm
Sides	400 mm

The 4100 series is prepared for external air from the rear and bottom. Drawings with measurements on the other models in this series, you will find on www.morsoe.com

The Morsø 4143, 4155 and the 4156 stoves are a well-proportioned stoves of an exceptional appearance expressed by the mirror reflection effect of its large glass door. Morsø 4155 is, at the same price, available in various glazed surface-finishes: matt, white/black. This distinguished glazed finish lends the stoves a stylish and modern appearance. Door to the log storage can be purchased.

Morsø 4155 Black
Item-no.: 64415541 - matt

6100 SERIES

Morsø 6140
Item-no.: 64610121

Morsø 6141
Item-no.: 64612121

Morsø 6143
Item-no.: 64612321

Morsø 6148
Item-no.: 64610221

Morsø 6150
Item-no.: 64612821

Morsø 6170
Item-no.: 64610721

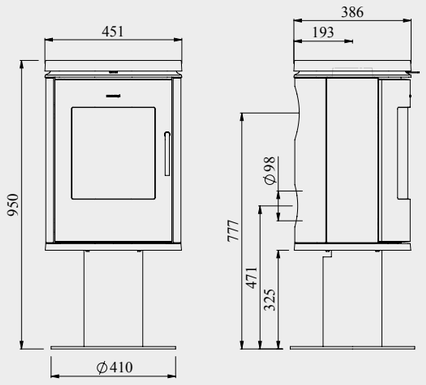

6148

Tested after EN 13240 — A+

Rated output	6 kW
Draft	12 Pa
Operating output	3-6 kW
Heats up	45-90 m²
Flue exit top/rear fits	Ø 120 mm
Weight	100-217 kg
Chamber width	33 cm
Efficiency	80,1%
Dust	29 mg/m³
CO	0,03%

Clearance to Combustibles

Rear	150 mm
Sides	400 mm

The 6100 series is prepared for external air from the rear and bottom.
Outside air kit for connection through bottom available.
Model 6170 and 6143 only with rear connection.
Drawings with measurements on the other models in this series, you will find on www.morsoe.com

The Morsø 6100-series fans the flames. The stove's unique combustion system helps ensure a higher temperature in the combustion chamber, which means it burns off the flue gases. This provides you with a cleaner and more environmentally-friendly combustion and a higher level of efficiency, guaranteeing you good fuel economy. Furthermore, the elegantly designed glass door and hidden mountings provide a good view of the fire and flames. The Morsø 6100-series are 80.1% net efficient with almost no smoke emissions.

Morsø 6148
Item-no.: 64610221

6600 SERIES

Morsø 6612
Item-no.: 64661221

Morsø 6643
Item-no.: 64660022

Morsø 6670
Item-no.: 64660061

MORSØ DESIGN HEART PLATES FOR 6600

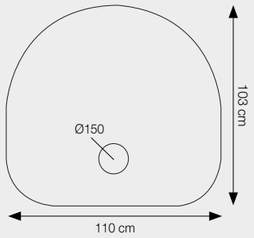

BLACK GLASS HEART PLATE WITH HOLE
Item-no.: 62929000

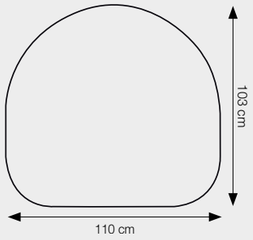

TRANSPARENT GLASS HEART PLATE
Item-no.: 62928400

6643

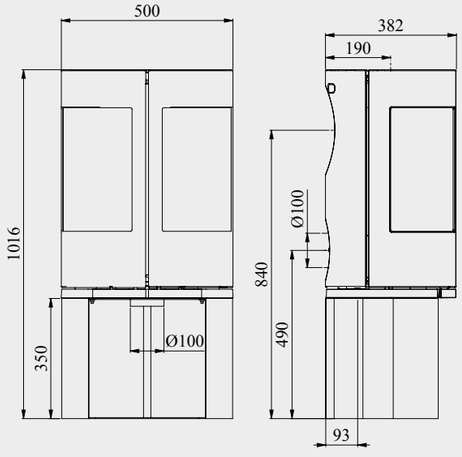

Tested after EN 13240 A+

Rated output	5,9 kW
Draft	12 Pa
Operating output	3-8 kW
Heats up	45-120 m²
Flue exit top/rear fits	Ø 150 mm
Weight	127-140 kg
Chamber width.	36 cm
Efficiency	81%
Dust	15 mg/m³
CO	0,05%

Clearance to Combustibles

Rear	150 mm
Sides	550 mm

The 6600 series is prepared for external air from the rear and bottom. Drawings with measurements on the other models in this series, you will find on www.morsoe.com

With the **Morsø 6600** series of stoves, the renowned Morsø brand has successfully produced a stove that sets entirely new standards and captivates onlookers with a surprising elegance and lightness. What's more, the view of the flames is bigger than it has ever been before. The stoves elliptical shape is complimented by a unique double door maximising the glass area. This provides a spectacular 180 degree view of the flames. The beautiful view of the flames is further enhanced by the gold tinted vermiculite that, like the stoves internal background view, is decorated with the legendary Morsø squirrel on the baffle – proof that this is a genuine Morsø stove.

Morsø 6612
Item-no.: 64661221

6800 SERIES

Morsø 6840
Item-no.: 64680921

Morsø 6843
Item-no.: 64680021

Morsø 6848
Item-no.: 64680121

Morsø 6870
Item-no.: 64680221

6843

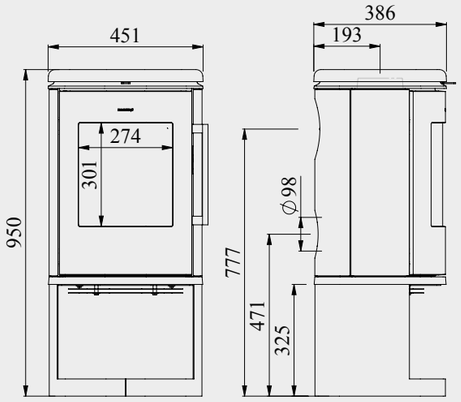

Tested after EN 13240

Rated output	6 kW
Draft	12 Pa
Operating output	3-6 kW
Heats up	45-90 m²
Flue exit top/rear fits	Ø 120 mm
Weight	110/217 kg
Chamber width	33 cm
Efficiency	80,1%
Dust	29 mg/m³
CO	0,03%

Clearance to Combustibles

Rear	150 mm
Sides	400 mm

The 6800 series is prepared for external air from the rear and bottom.
Outside air kit for connection through bottom available.
Model 6870 only with rear connection.
Drawings with measurements on the other models in this series, you will find on www.morsoe.com

The **Morsø 6800-series** is Morsø's well-loved ellipse cast iron stove with an elegant rounded-off top that emphasises its organic shape. The beautiful rustic cast iron suits and enhances any home. Deep in the heart of the stove the famous squirrel can be seen, bringing joy and warmth with the aid of the flames. The door handle stays cool during use, and conceals an elegant solution with a self-closing door.

Morsø 6843
Item-no.: 64680021

7110

Morsø 7110
Item-no.: 64710921

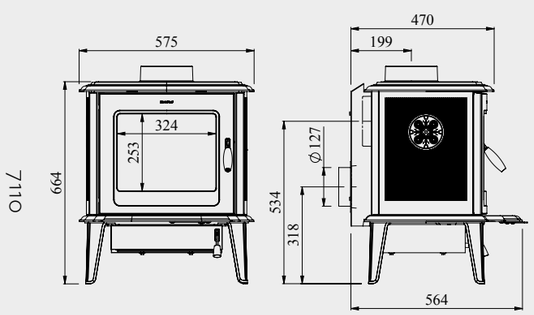

7110

Tested after EN 13240 — A

Rated output	7 kW
Draft	12 Pa
Operating output	4-9 kW
Heats up	60-135 m²
Flue exit top/rear fits	Ø 150 mm
Weight	145 kg
Chamber width	40 cm
Efficiency	78%
Dust	22 mg/m³
CO	0,079%

Clearance to Combustibles

Rear	150 mm
Sides	500 mm

The model 7110 is prepared for external air from the rear and bottom.
Air kit available.

The **Morsø 7110** wood stove , like all Morsø cast iron stoves, has a very large glass panel without any interfering bars and a superior air wash system to keep the glass clean for an unobstructed view of the fire. Designed with Scandinavian simplicity, the Morsø 7110 with sharp edges and straight lines are combined with classical American elements such as the horizontal design and distinct profiles in the top and bottom plates. Whether you have a contemporary-designed home or a classical one, the Morsø 7110 will seamlessly blend in to make your home cozy and warm.

Morsø 7110
Item-no.: 64710921

7300 SERIES

Morsø 7340
Item-no.:
64730011

Morsø 7342
Item-no.:
64730024

Morsø 7343
mit Holzfach
Item-no.: 64730022

Morsø 7349
Item-no.:
64730049

Morsø 7370
Item-no.:
64730061

Morsø 7393
Item-no.:
64730071

MORSØ DESIGN HEART PLATES FOR 7300

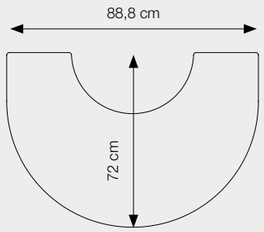

HALF-CIRCLE CUT GLASS HEART PLATE
(not for model 7349) Item-no.: 62929400

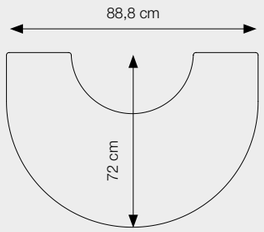

HALF-CIRCLE CUT GLASS HEART PLATE
(only for model 7349) Item-no.: 62928800

7349

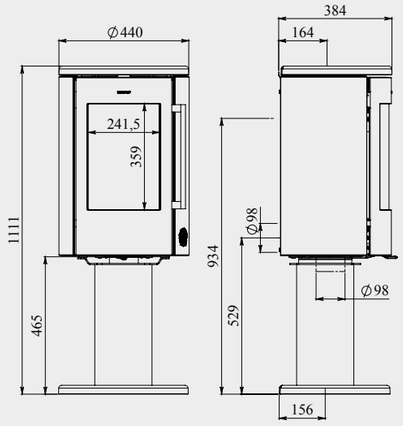

Tested after EN 13240

Rated output	4,3 kW
Draft	12 Pa
Operating output	3-7 kW
Heats up	45-105 m²
Flue exit top/rear fits	Ø 150 mm
Weight	109-121 kg
Chamber width	33 cm
Efficiency	82,3%
Dust	17,5 mg/m³
CO	0,05%

Clearance to Combustibles

Rear	200 mm
Sides	400 mm

The 7300 series is prepared for external from the rear and bottom.
Model 7370 only with rear connection.
Drawings with measurements on the other models in this series, you will find on www.morsoe.com

The **Morsø 7300** series provides considerable design freedom to the houseowner, and thus makes it easy to adapt the stove to the style of the individual home. If you want the wood stack to create atmosphere, you should choose a model with a log-storage facility that brings the light wood into the room. If your style tends toward discrete charm, you should opt for a model with a drawer that slides elegantly into the black front of the stove.

Morsø 7370
Item-no.: 64730061

7400 SERIES

Morsø 7440
Item-no.:
64740011

Morsø 7442
Item-no.:
64740024

Morsø 7443
Item-no.:
64740022

Morsø 7449
Item-no.:
64740049

Morsø 7470
Item-no.:
64740061

Morsø 7493
Item-no.:
64740071

MORSØ DESIGN HEART PLATES FOR 7400

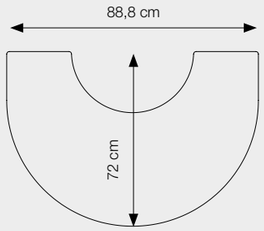

HALF-CIRCLE CUT GLASS HEART PLATE
(not for model 7449) Item-no.: 62929400

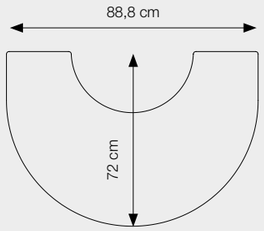

HALF-CIRCLE CUT GLASS HEART PLATE
(only for model 7449) Item-no.: 62928800

7440

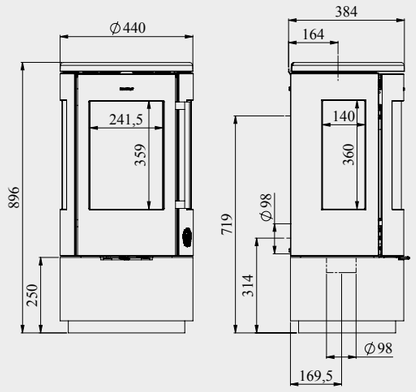

Tested after EN 13240

Rated output	4,3 kW
Draft	12 Pa
Operating output	3-7 kW
Heats up	45-105 m²
Flue exit top/rear fits	Ø 150 mm
Weight	109-121 kg
Chamber width	33 cm
Efficiency	82,3%
Dust	17,5 mg/m³
CO	0,05%

Clearance to Combustibles

Rear	200 mm
Sides	400 mm

The 7400 series is prepared for external from the rear and bottom.
Model 7470 only with rear connection.
Drawings with measurements on the other models in this series, you will find on www.morsoe.com

Morsø 7400 series takes the best qualities of modern wood burning stoves and uses them to give the consumer a modern take on a classic design. At the same time the series celebrates Morso's 160th anniversary and, for the first time presents the newly redesigned "Squirrel" motif. This motif decorates the matt black side of the stove and emphasizes the quality finish whilst celebrating our 160 year history as the leading manufacturer of high quality wood burning stoves.

Morsø 7449
Item-no.: 64740049

7648

Morsø 7648
Item-no.: *64760321*

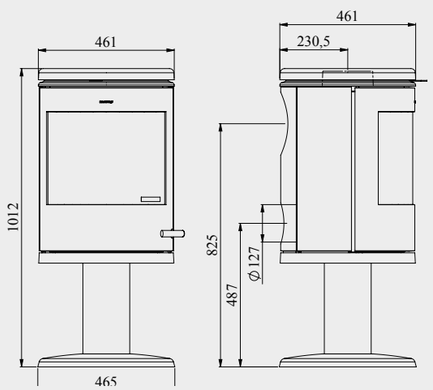

Tested after EN 13240 — A

Rated output	6,2 kW
Draft	12 Pa
Operating output	3-8 kW
Heats up	45-120 m²
Flue exit top/rear fits	Ø 150 mm
Weight	140 kg
Chamber width	33 cm
Efficiency	78,7%
Dust	21 mg/m³
CO	0,10%

Clearance to Combustibles

Rear	150 mm
Sides	500 mm

The model 7648 is prepared for external air from the rear.

The **Morsø 7648** has its own unique character – its spherical shape, feminine transitions and the large door glass. These unique design elements provide the stove with a personal style and a soft organic touch, yet still produced in the robust and almost indestructible material cast iron. The Morsø 7648 wood burning stove is a work of art not unlike a living being, warming your house, your body and soul.

Morsø 7648
Item-no.: *64760321*

7800 SERIES

Morsø 7840
Item-no.:
64790081

Morsø 7842
Item-no.:
64790018

Morsø 7843
Item-no.:
64790020

Morsø 7848
Item-no.:
64790088

Morsø 7870
Item-no.:
64790089

Morsø 7893
Item-no.:
64790045

MORSØ DESIGN HEART PLATES FOR 7800

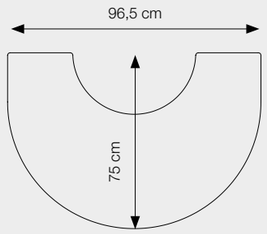

HALF-CIRCLE CUT GLASS HEART PLATE
(not for model 7848) Item-no.: 62919900

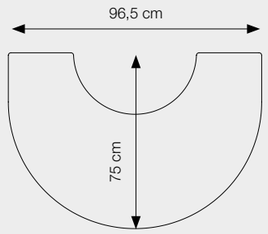

HALF-CIRCLE CUT GLASS HEART PLATE
(only for model 7848) Item-no.: 62928700

7843

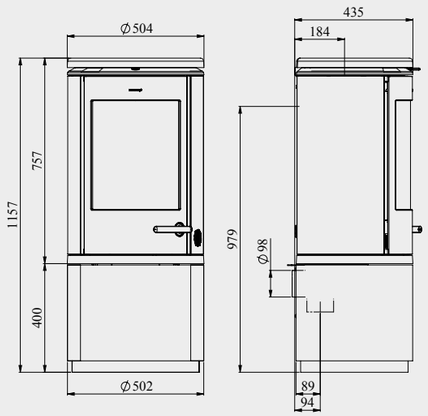

Tested after EN 13240 — A

Rated output	7,3 kW
Draft	12 Pa
Operating output	3-8 kW
Heats up	45-120 m²
Flue exit top/rear fits	Ø 150 mm
Weight	130-167 kg
Chamber width	33 cm
Efficiency	79%
Dust	7 mg/m³
CO	0,04%

Clearance to Combustibles

Rear	125 mm
Sides	700 mm

The 7800 series is prepared for external air from rear and bottom.
Air kit available. Not possible for models 7848 and 7870.
Models 7843 with drawer only connection from rear.
Drawings with measurements on the other models in this series, you will find on www.morsoe.com

Morsø 7800 is a choice for life. The design details - such as the handle of stainless steel - make a fine contrast to the matt black cast iron. The large glass door provides a good view of the flames, and the modern design of Monica Ritterband suits the design-conscious home interior. The stoves from Morsø fulfil the strictest environmental requirements and bear the Nordic Swan Eco-label which guarantees a sustainable product. Wood burning stove with high efficiency

Morsø 7840
Item-no.: 64790081

7900 SERIES

Morsø 7940
Item-no.:
64790011

Morsø 7942
Item-no.:
64790019

Morsø 7943
Item-no.:
64790023

Morsø 7948
Item-no.:
64790051

Morsø 7970
Item-no.:
64790061

Morsø 7993
Item-no.:
64790040

MORSØ DESIGN HEART PLATES FOR 7900

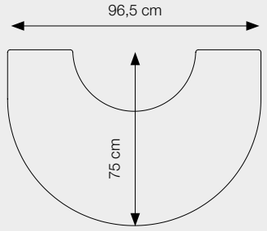

HALF-CIRCLE CUT GLASS HEART PLATE
(not for model 7948) Item-no.: 62919900

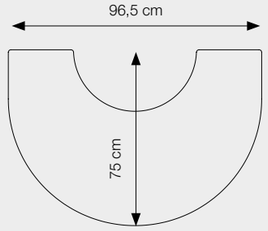

HALF-CIRCLE CUT GLASS HEART PLATE
(only for model 7948) Item-no.: 62928700

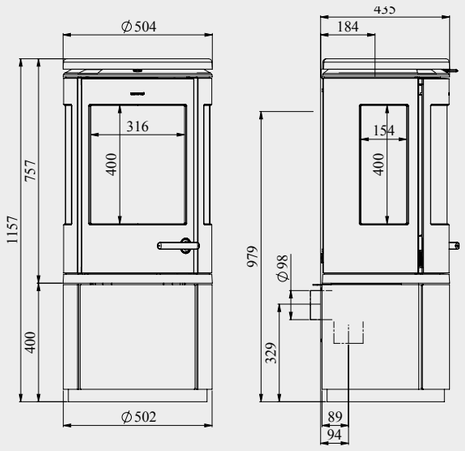

7942

Tested after EN 13240 — A

Rated output	7,3 kW
Draft	12 Pa
Operating output	3-8 kW
Heats up	45-120 m²
Flue exit top/rear fits	Ø 150 mm
Weight	128-165 kg
Chamber width.	33 cm
Efficiency	79%
Dust	7 mg/m³
CO	0,04%

Clearance to Combustibles

Rear	125 mm
Sides	700 mm

The 7900 series is prepared for external air from rear and bottom.
Air kit available. Not possible for models 7948 and 7970.
Models 7943 with drawer only connection from rear.
Drawings with measurements on the other models in this series, you will find on www.morsoe.com

With the **Morsø 7900** series, Morsø has worked with the designer Monica Ritterband to develop and create a new series of cast iron wood-burners, whose functionality and design suit any home - and of course with quality as the key. The Morsø 7900-series is an innovative design based on a modular system, that makes it possible to customise each wood-burning stove to suit individual needs, both in terms of design and functionality.

Morsø 7943
Item-no.: 64790023

8100 SERIES

Morsø 8140
Item-no.: 64810121

Morsø 8143
Item-no.: 64814221

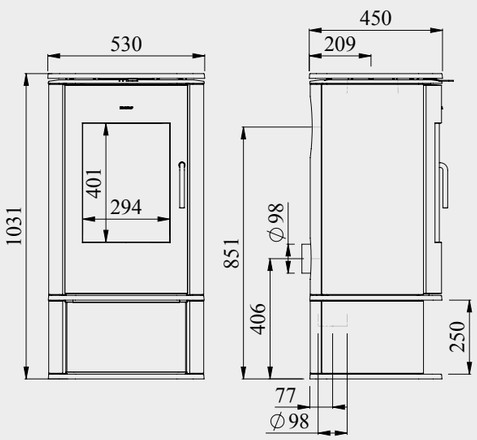

8143

Tested after EN 13240 — A+

Rated output	6,3 kW
Draft	12 Pa
Operating output	3-8 kW
Heats up	45-120 m²
Flue exit top/rear fits	Ø 150 mm
Weight	168-188 kg
Chamber width	35 cm
Efficiency	81%
Dust	23 mg/m³
CO	0,07%

Clearance to Combustibles

Rear	150 mm
Sides	500 mm

The 8100 series is prepared for external air from rear and bottom.
Air kit available.
Drawings with measurements on the other models in this series, you will find on www.morsoe.com

Morsø 8140 sets a new standard in stove design both in terms of functionality and aesthetics. The stove has a clean and simple design, where the combination of soft, rounded contours and simple details give the stove a light and timeless look. This guarantees you a classically beautiful stove that will last for decades, while the cast iron's raw and living structure will provide both a rustic and exclusive tone. The flexibility of working with cast iron has enabled us to design a number of details for this stove, which will warm your spirit not just your home. The stove's large glass area provides a feeling of watching an open fire. An optional outside air kit is available.

Morsø 8143
Varenr. 64814221

8259

Morsø 8259
Item-no.: 64820339

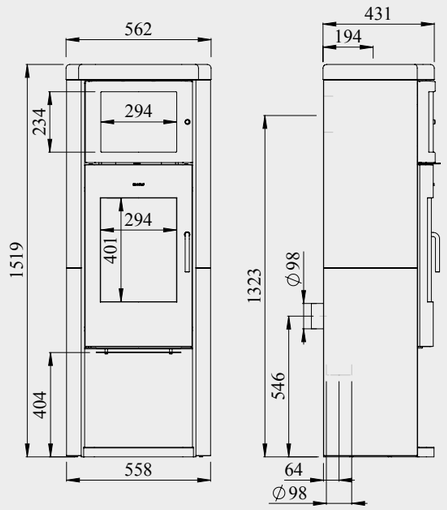

Tested after EN 13240 — A+

Rated output	6,3 kW
Draft	12 Pa
Operating output	3-8 kW
Heats up	45-120 m²
Flue exit top/rear fits	Ø 150 mm
Weight	332 kg
Chamber width	35 cm
Efficiency	81%
Dust	23 mg/m³
CO	0,07%

Clearance to Combustibles

Rear	150 mm
Sides	500 mm

The 8200 series is prepared for external air from rear and bottom.
Air kit available.
Drawings with measurements on the other models in this series, you will find on www.morsoe.com

Morsø 8259 is a multi-functional solid cast iron wood-burning stove. This stove guarantees efficient heat distribution due to the combination of a large firebox, integrated heating panel and soapstone sides. The large firebox has a particularly good output and can hold large pieces of firewood. Morsø 8259 has soapstone sides and top. The exclusive soapstone material has a decorative function and excellent thermal properties. The soapstone cladding gives the stove a splendid appearance and also functions as a heat store, so that the stove gives off heat for a long time after it goes out. A wood-burning stove with soapstone cladding is especially suitable for rooms that need heating overnight.

Morsø 8259
Item-no.: 64820339

8710

Morsø 8710
Item-no.: 64871021

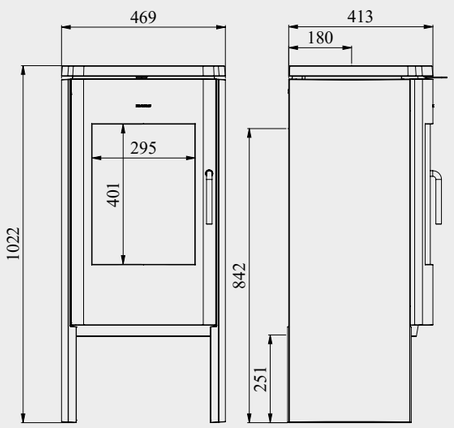

Tested after EN 13240 A+

Rated output	6,3 kW
Draft	12 Pa
Operating output	3-8 kW
Heats up	45-120 m²
Flue exit top/rear fits	Ø 150 mm
Weight	120 kg
Chamber width	35 cm
Efficiency	81%
Dust	23 mg/m³
CO	0,07%

Clearance to Combustibles

Rear	150 mm
Sides	500 mm

Morsø 8710 represents the further development of the well-known Morsø 8100 range. Morsø 8710 is a radiant heater, entirely carried out in cast iron. It is unpretentious and well-planned in design, and – with only one control lever for combustion control – it is easily operated. The Morsø 8100-series' thoroughly tested combustion engineering, that is also applied here, meets even the strictest environmental standards.

Morsø 8710
Item-no.: 64871021

8800 SERIES

Morsø 8840
Item-no.: 64880821

Morsø 8893
Item-no.: 64881221

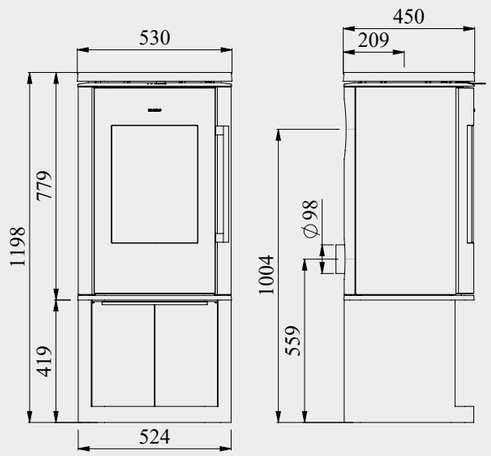

8893

Tested after EN 13240 — A+

Rated output	6,3 kW
Draft	12 Pa
Operating output	3-8 kW
Heats up	45-120 m²
Flue exit top/rear fits	Ø 150 mm
Weight	190-200 kg
Chamber width.	35 cm
Efficiency	81%
Dust.	23 mg/m³
CO	0,07%

Clearance to Combustibles

Rear	150 mm
Sides	500 mm

The 8800 series is prepared for external air from rear and bottom.
Air kit available.
Drawings with measurements on the other models in this series, you will find on www.morsoe.com

The **Morsø 8800** series is one of the most powerful Morsø stoves. Tall and handsome in cast iron, this trusty source of comfort will spread warmth and comfort time and again. The solid cast iron distributes the heat efficiently, and the large firebox can heat areas up to 120 m2. Morsø's new 8800 series builds on the principles of the popular 8100 series and has been given a higher top plate. The door handle stays cool during use, and the door is self-closing and easy to operate.

Morsø 8893
Item-no.: 64881221

5660

Morsø 5660
Item-no.: 64566221

An original wood-burning stove & the joys of a crackling fire Morso is adding yet another great product to its extensive range of wood burning stoves, the Morsø 5660 insert. Creating comfort and cosiness in any home the Morsø 5660 insert is probably the cleanest and most modern appliance in its class. The natural, vivid texture of the cast iron surface makes for a rustic yet elegant appearance. Relative to its size, the 5660 insert has a large 'air-washed' window, that provides beautiful unbroken view of the dancing flames within. The simple design of the 5660 insert will create comfort and cosiness in any home.

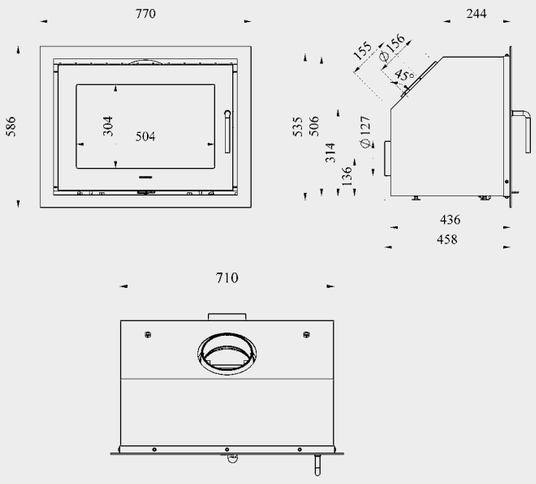

5660

Tested after EN 13240 — A+

Rated output	7,3 kW
Draft	12 Pa
Operating output	4-8 kW
Heats up	60-120 m²
Flue exit top/rear fits	Ø 150 mm
Weight	125 kg
Chamber width.	58 cm
Efficiency	82%
Dust	12 mg/m³
CO	0,037%

Clearance to Combustibles

Rear	100 mm
Sides	400 mm
From floor	300 mm

The model 5660 is prepared for external air from rear. Air kit available.

S80-90

Morsø S80-90
Item-no.: 65800121

With a rectangular design in coal-black glass and a size which leaves all other in-built fireplace inserts standing, the Morsø S80-90 is without doubt becoming a sought-after new product among Denmark's homeowners. The hinges are hidden discretely in the stove's design, while the large, soot-free glass door ensures a beautiful and uninterrupted view of the flames.

Tested after EN 13240 — A

Rated output	7 kW
Draft	12 Pa
Operating output	5-9 kW
Heats up	75-135 m²
Flue exit top/rear fits	Ø 150 mm
Weight	124 kg
Chamber width.	67 cm
Efficiency	76,7%
CO	0,09%

Clearance to Combustibles

Rear	200 mm
Sides	400 mm
From floor	300 mm

The model S80-90 is prepared for external air from rear.

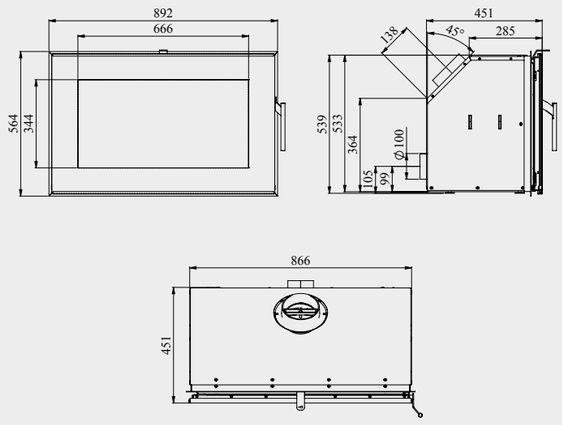

S80-90

62916421
Morsø Curva Poker

62916521
Morsø Curva Fire Tools

62917021
Morsø Loop Fire Tool Set

62916921
Morsø Loop Log Ring

62912200
Morsø Canvas Wood Carrier

62905700
Morsø Ash & Storage Bucket

62917121
Morsø Complete Fire Tools 40 cm

61753201
Morsø Cast Iron Trivet with N.A.C. Logo

61753301
Morsø Cast Iron Trivet with squirrel

Morsø Assembly & Maintenance

62917421
Morsø Ellipse Fire Tools

Recht: 62900700 / Links: 62900800
Morsø Leather Glove left/right

62920521
Morsø Firewood Box

61931100
Morsø Simplica Humidifier

62901200
Morsø Flue Gas Thermometer

62900221
Morsø Classic Fire Tools 69 cm

62929900
Morsø Moisture Meter

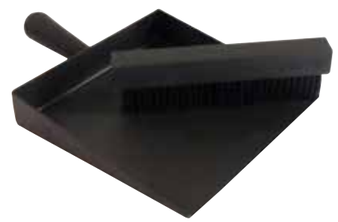

62917221
Morsø Dustpan & Broom

62853479
Morsø Cast Iron Humidifier 2,0 L

61853079
Morsø Cast Iron Humidifier 4,5 L

62900421
Morsø Firewood Bucket 32 x 40 cm

62920421
Morsø Firewood Bucket 34 x 45 cm

62916300
Morsø Curva Log Carrier

62906821
Morsø Child Guard 110 x 110 x 70 cm

62906121
Morsø Conform Fire Tools

Morsø hearth plates

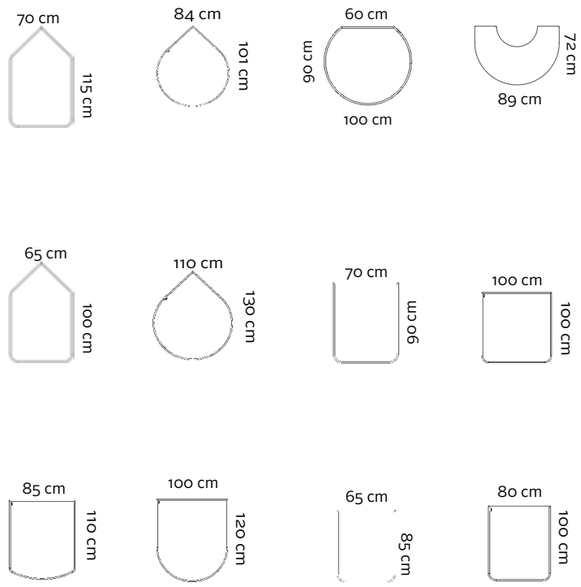

MORSØ HEARTH PLATES

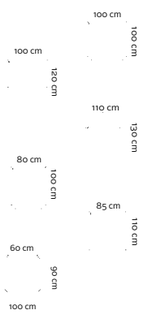

TYP	Item-no.:
GLASS HEARTH PLATE, 6 MM W/ LOGO	
Square, 100 x 100 cm	62928100
Halbkreis, 100 x 120 cm	62928200
Tropfenförmig, 110 x 130 cm	62928300
Viereckig, 80 x 100 cm	62929100
Bogenförmige vordere Kante, 85 x 110 cm	62929200
Rund, 100 x 90 cm	62929300
Silicone band for glass hearth pads, 4,5 m	79601700

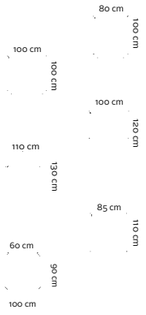

TYP	Item-no.:
BLACK STEEL HEARTH PLATE, 2 MM	
Rectangular, 80 x 100 cm	62901321
Square, 100 x 100 cm	62901421
Half-circle, 100 x 120 cm	62901521
Teardrop shape, 110 x 130 cm	62901621
Rectangular with arched front, 85 x 100 cm	62911721
Circle with straight rear edge, 90 x 100 cm	62917821

MORSØ FLUE PIPES

2 MM STEEL PLATE Ø 120 MM IN BLACK - NOTE*

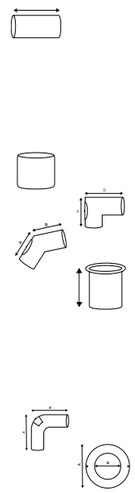

TYP	Item-no.:
Straight pipe – 25 cm	62120021
Straight pipe – 50 cm	62120121
Straight pipe – 75 cm	62120221
Straight pipe – 100 cm	62120321
*Adapter	62120521
Bend – 90°; A: 195 mm x W: 260 mm	62120621
Bend – 45°; A: 185 mm x W: 200 mm	62120821
Pipe bush – 150 mm	62120921
Pipe bush – 300 mm	62121021
Pipe bush – for outside corner	62121421
Pipe bush – for inside corner	62121521
Soft bend – 90°; A: 635 mm x W: 435 mm	62121721
Trim ring, Inside Ø 128 mm, outside Ø 205 mm	62901721

*Note: Adapter is needed in connection with each pipe connection

2 MM STEEL PLATE Ø 150 MM IN BLACK - NOTE*

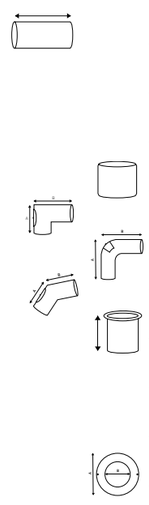

TYP	ITEM-NO.:
Straight pipe – 25 cm	62150021
Straight pipe – 50 cm	62150121
Straight pipe – 75 cm	62150221
Straight pipe – 100 cm	62150321
*Adapter	62150521
Bend – 90°; A: 225 mm x W: 265 mm	62150621
Soft bend – 90°; A: 635 mm x W: 435 mm	62150721
Bend – 45°; A: 190 mm x W: 210 mm	62150821
Pipe bush – 150 mm	62150921
Pipe bush – 300 mm	62151021
Pipe bush – for outside corner	62151421
Pipe bush – for inside corner	62151521
Trim ring, Indside Ø 160 mm, outside Ø 240 mm	62901821

*Note: Adapter is needed in connection with each pipe connection

ENVIRONMENTALLY FRIENDLY COMBUSTION

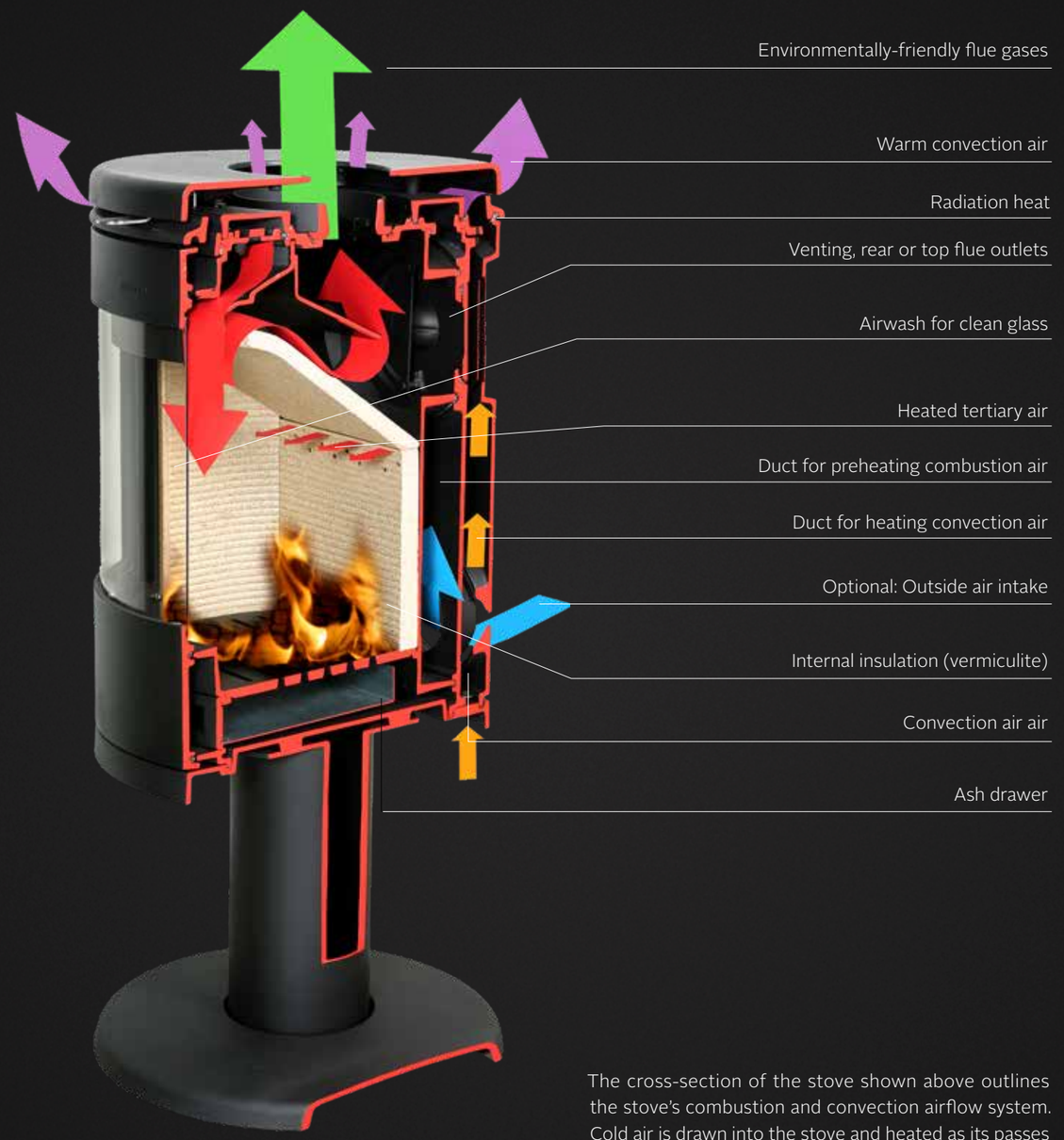

The cross-section of the stove shown above outlines the stove's combustion and convection airflow system. Cold air is drawn into the stove and heated as its passes through the cast iron channels (the heated air washes the glass keeping it clean, clear and free from soot).
The hot air also provides perfectly heated combustion air (in addition the heated tertiary air aids secondary combustion of any smoke and gasses, increasing efficiency and reducing the environmental impact).

We're hot for fire. One of our most important areas of expertise is the production of environmentally-aware stoves, and we happily describe ourselves as experts in combustion technology.